WHITE
BOX
WORKSHOP

METAL STRUCTURES

Зміст

Solar Pole

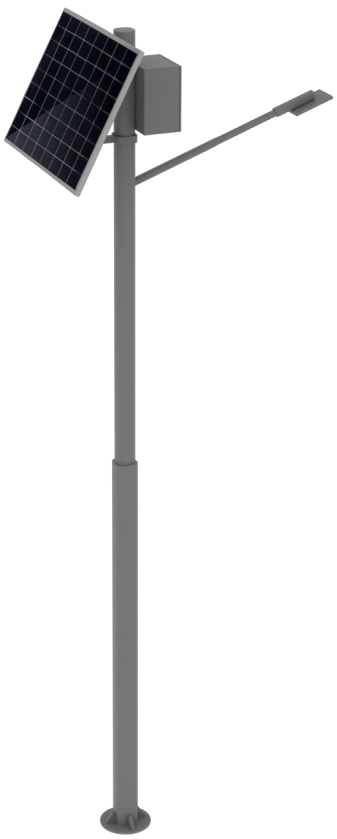

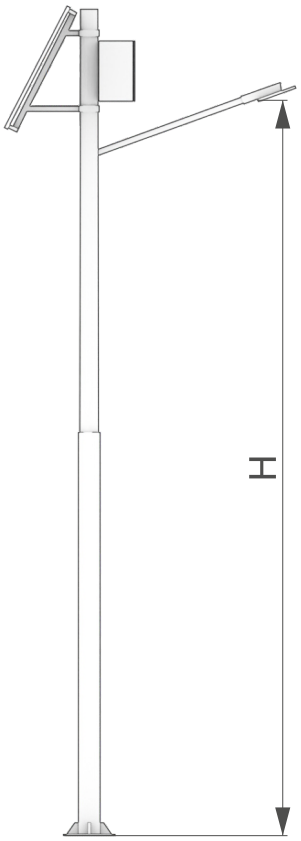

Pole with Built-in Control Unit and Battery Pack (AKB)

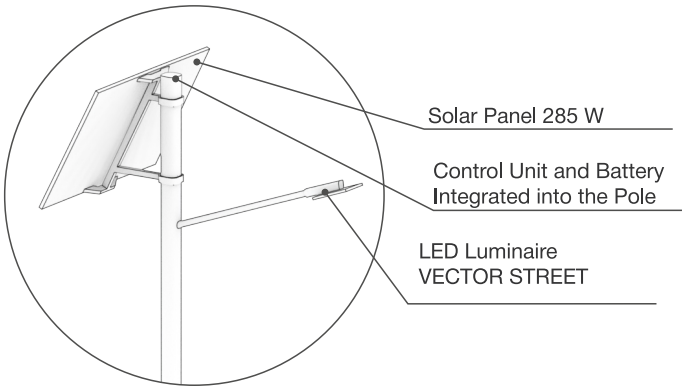

Pole with Integrated Electrical Cabinet:

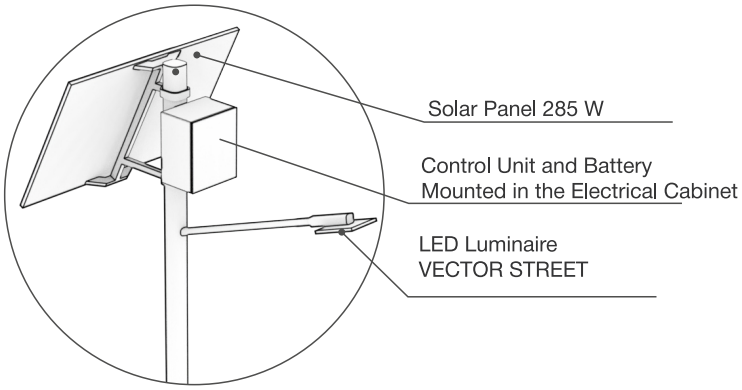

A solar-powered autonomous lighting pole operates independently of external power sources and is installed in areas where it is not possible to lay overhead or underground power lines for lighting.
During the day, solar energy is converted into electricity and stored in a battery. At night, the stored energy powers the LED luminaire.
The pole is mounted on a concreted anchor assembly of type FM or FM6.

Corrosion Protection Options:
- Anti-corrosion primer and 3-in-1 anti-corrosion enamel
- Cold galvanization and 3-in-1 anti-corrosion enamel
- Hot-dip galvanization

Item	Maximum Bending Moment, t·m	Height (H), m	Weight, kg
AOF-4,0-1,0	1,0	4,0	80,4
AOF-5,0-1,3	1,3	5,0	102,5
AOF-6,0-1,7	1,7	6,0	122,7
AOF-7,0-2,0	2,0	7,0	143,8

LOFT Pole

LOFT Single-Sided Bracket Pole

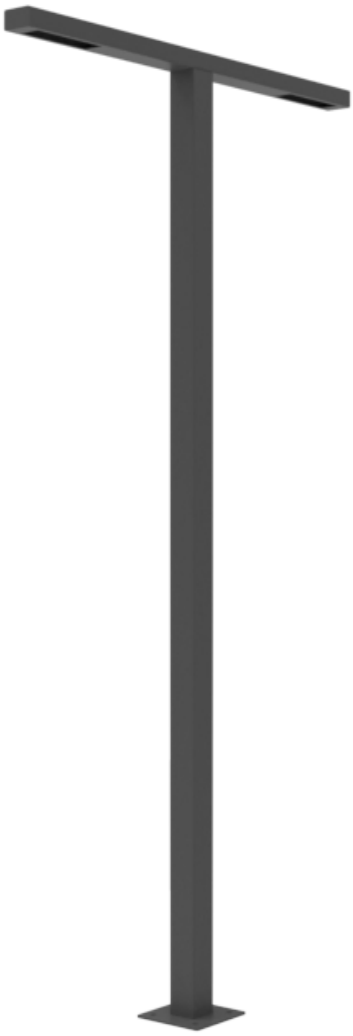

LOFT Single-Sided Bracket Pole

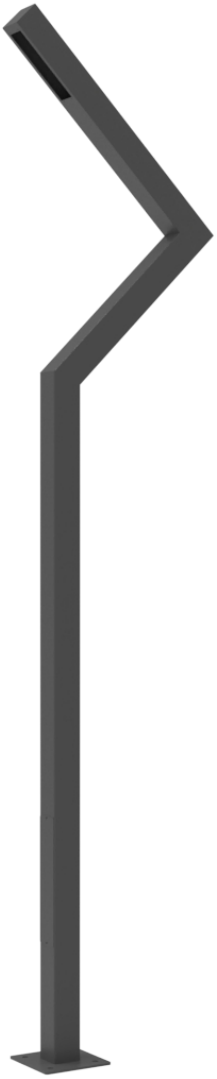

LOFT Z-type Pole

LOFT Z2-type Pole

The poles are used for lighting compact areas, residential courtyards, private estates, park zones, bridges, and various recreational spaces. This type of park pole is designed in a LOFT style, offering an aesthetically appealing appearance.
The poles are designed for mounting one or two integrated LED luminaires.
The LED luminaire is built into the pole (ordered separately).
The pole is installed on a concreted anchor assembly.

Corrosion Protection Options:
- Anti-corrosion primer and 3-in-1 anti-corrosion enamel
- Cold galvanization and 3-in-1 anti-corrosion enamel
- Hot-dip galvanization

Item	Height (H), m	Flange Size (WxW), mm	Number of Luminaires, pcs	Weight, kg	Embedded Anchor Type
Pole LOFT Г					
LOFT Г-1-2,5-40 (30)	2,5	250x250	1	35,2	ФМ1
LOFT Г-1-3,0-40 (30)	3,0	250x250	1	39,2	ФМ1
LOFT Г-1-3,5-40 (30)	3,5	250x250	1	45,3	ФМ1
LOFT Г-1-4,0-40 (30)	4,0	290x290	1	51,9	ФМ1
LOFT Г-1-4,5-40 (30)	4,5	290x290	1	56,0	ФМ1
LOFT Г-1-5,0-40 (30)	5,0	290x290	1	60,1	ФМ1
Pole LOFT Г2					
LOFT Г2-2,5-80 (60)	2,5	250x250	2	40,9	ФМ1
LOFT Г2-3,0-80 (60)	3,0	250x250	2	46,9	ФМ1
LOFT Г2-3,5-80 (60)	3,5	250x250	2	51,0	ФМ1
LOFT Г2-4,0-80 (60)	4,0	290x290	2	57,6	ФМ1
LOFT Г2-4,5-80 (60)	4,5	290x290	2	61,7	ФМ1
LOFT Г2-5,0-80 (60)	5,0	290x290	2	65,8	ФМ1
Pole LOFT Z					
LOFT Z-3,0-40 (30)	3,0	250x250	1	45,0	ФМ1
LOFT Z-3,5-40 (30)	3,5	250x250	1	49,1	ФМ1
LOFT Z-4,0-40 (30)	4,0	290x290	1	53,2	ФМ1
LOFT Z-4,5-40 (30)	4,5	290x290	1	58,1	ФМ1
LOFT Z-5,0-40 (30)	5,0	290x290	1	61,3	ФМ1
Pole LOFT Z2					
LOFT Z2-3,0-80 (60)	3,0	250x250	2	45,2	ФМ1
LOFT Z2-3,5-80(60)	3,5	250x250	2	49,3	ФМ1
LOFT Z2-4,0-80 (60)	4,0	290x290	2	53,4	ФМ1
LOFT Z2-4,5-80 (60)	4,5	290x290	2	58,3	ФМ1
LOFT Z2-5,0-80 (60)	5,0	290x290	2	61,5	ФМ1

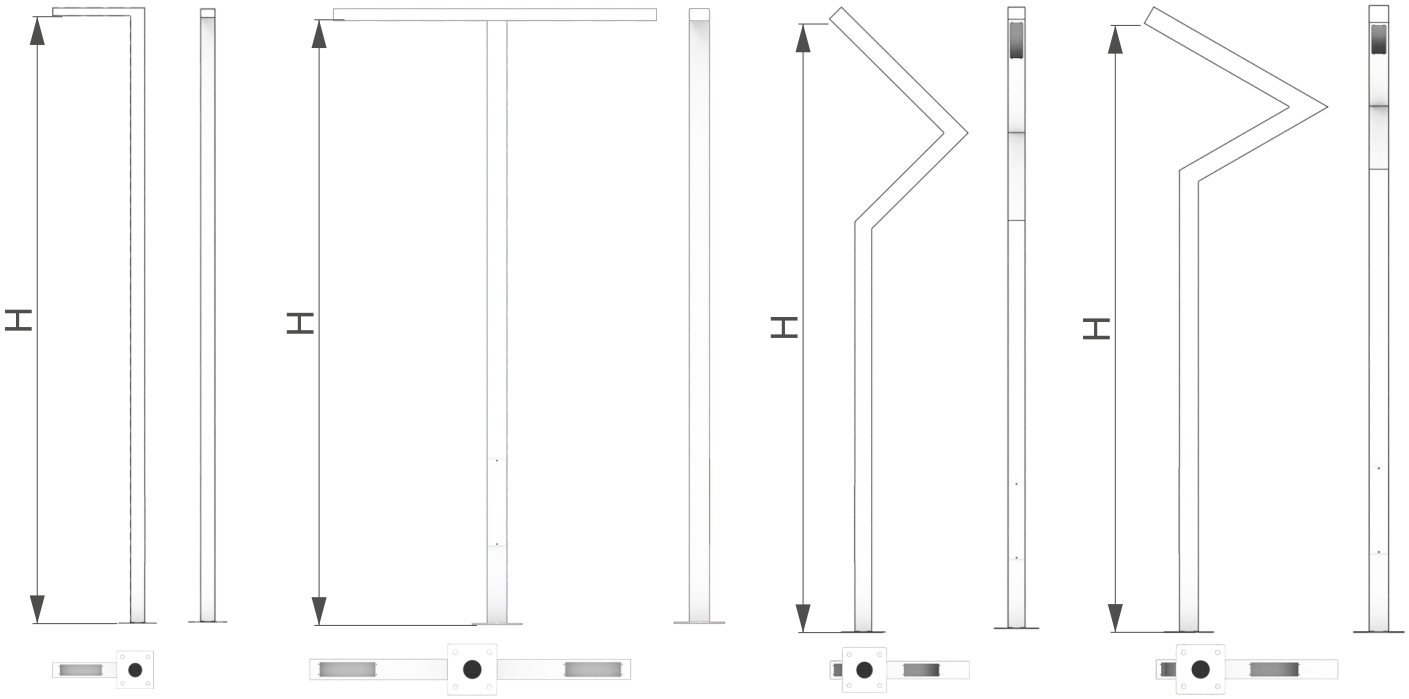

LOFT Single-Sided Bracket Pole | **LOFT Single-Sided Bracket Pole** | **LOFT Z-type Pole** | **LOFT Z2-type Pole**

Flanged Park Pole OPF

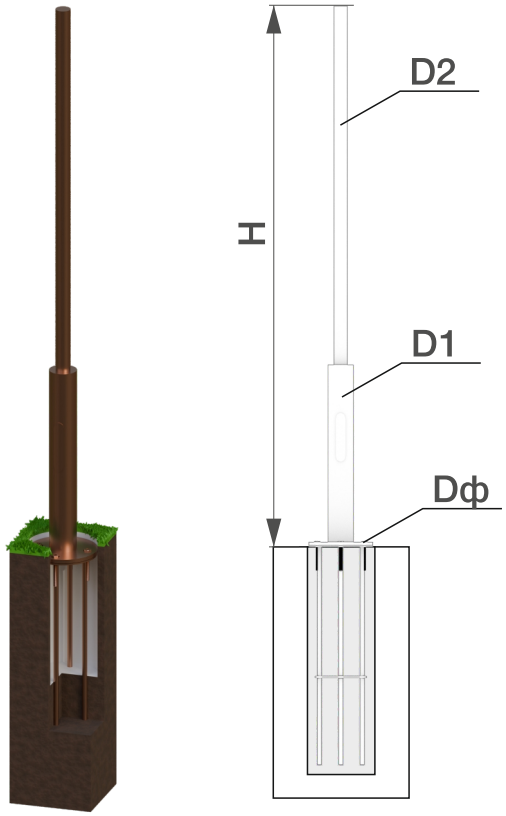

The poles are used for lighting compact areas, residential courtyards, private estates, park zones, bridges, and various recreational spaces.
A luminaire can be mounted directly onto the pole or attached via a bracket.
The pole is installed on a concreted anchor assembly of type FM01 or Fm02.

Corrosion Protection Options:
- Anti-corrosion primer and 3-in-1 anti-corrosion enamel
- Cold galvanization and 3-in-1 anti-corrosion enamel
- Hot-dip galvanization

Item	Height (H), m	Flange Size (Dx), mm	D1, mm	D2, mm	D3, mm	Weight, kg	Embedded Anchor Type
Flanged Park Pole	**OPF**						
OPF108/57)-2,0	2,0	220	108	57	-	16,5	FM01-6
OPF(108/57)-2,5	2,5	240	108	57	-	19,5	FM01-8
OPF(108/57)-3,0	3,0	240	108	57	-	21,6	FM01-8
OPF(108/57)-3,5	3,5	260	108	57	-	26,0	FM01-10
OPF(108/57)-4,0	4,0	260	108	57	-	29,1	FM01-10
OPF(108/76/57)-4,0	4,0	260	108	76	57	31,0	FM02-10
OPF(108/76/57)-4,5	4,5	260	108	76	57	35,0	FM02-10
OPF(108/76/57)-5,0	5,0	260	108	76	57	37,7	FM02-10
Flanged Park Pole	**OP1F**						
OP1F(108/76)-2,5	2,5	260	108	76	-	25,9	FM02-8
OP1F(108/76)-3,0	3,0	260	108	76	-	28,6	FM02-8
OP1F(108/76)-3,5	3,5	260	108	76	-	32,0	FM02-10
OP1F(108/76)-4,0	4,0	260	108	76	-	34,7	FM02-10
OP1F(108/76)-4,5	4,5	260	108	76	-	37,2	FM02-11
OP1F(108/76)-5,0	5,0	260	108	76	-	39,9	FM02-11
Flanged Park Pole	**OP2F**						
OP2F(127/76)-3,0	3,0	260	127	76	-	29,8	FM02-8
OP2F(127/76)-3,5	3,5	260	127	76	-	33,7	FM02-10
OP2F(127/76)-4,0	4,0	260	127	76	-	36,4	FM02-10
OP2F(127/76)-4,5	4,5	260	127	76	-	39,0	FM02-11
OP2F(127/76)-5,0	5,0	260	127	76	-	41,7	FM02-11

*D3 - Diameter of the Additional Pole Section

Park Pole OP

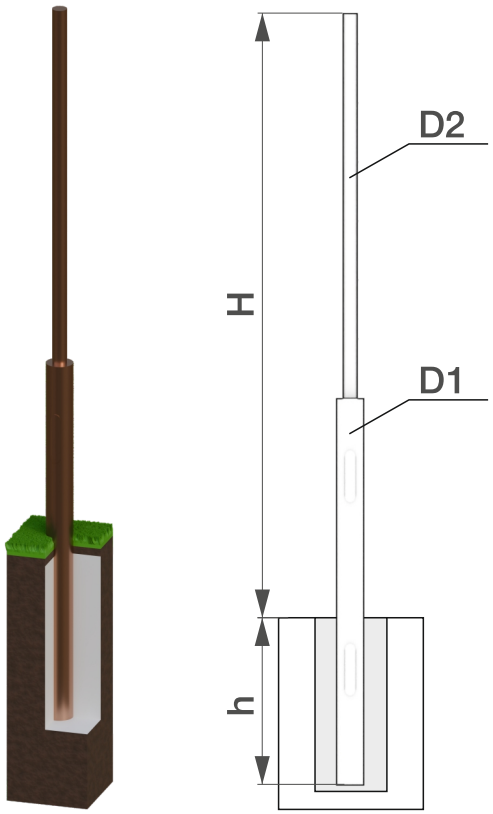

Park lighting poles are used for illuminating compact areas, residential courtyards, private estates, park zones, bridges, and various recreational spaces.
A luminaire can be mounted directly onto the pole or attached via a bracket.
The pole is secured in the ground or concreted into a drilled pit.

Corrosion Protection Options:
- Anti-corrosion primer and 3-in-1 anti-corrosion enamel
- Cold galvanization and 3-in-1 anti-corrosion enamel
- Hot-dip galvanization

Item	Pole Height (H), m	Height of the Underground Section (h), m	D1, mm	D2, mm	D3, mm	Weight, kg
Park Pole OP						
OP(108/57)-2,0-0,8	2,0	0,8	108	57	-	19,6
OP(108/57)-2,5-0,8	2,5	0,8	108	57	-	22,0
OP(108/57)-3,0-0,8	3,0	0,8	108	57	-	24,0
OP(108/57)-3,5-1,0	3,5	0,8	108	57	-	29,3
OP(108/57)-4,0-1,0	4,0	0,8	108	57	-	32,4
OP(108/76/57)-4,0-1,0	4,0	1,0	108	76	57	32,2
OP(108/76/57)-4,5-1,1	4,5	1,0	108	76	57	38,1
OP(108/76/57)-5,0-1,1	5,0	1,0	108	76	57	40,8
Park Pole Op1						
OP1(108/76)-2,5-0,8	2,5	0,8	108	76	-	24,3
OP1(108/76)-3,0-0,8	3,0	0,8	108	76	-	27,0
OP1(108/76)-3,5-1,0	3,5	1,0	108	76	-	32,5
OP1(108/76)-4,0-1,0	4,0	1,0	108	76	-	35,2
OP1(108/76)-4,5-1,1	4,5	1,1	108	76	-	38,6
OP1(108/76)-5,0-1,1	5,0	1,1	108	76	-	41,3
Park Pole Op2						
OP2(127/76)-3,0-0,8	3,0	1,0	127	76	-	29,3
OP2(127/76)-3,5-0,8	3,5	1,0	127	76	-	35,7
OP2(127/76)-4,0-1,0	4,0	1,1	127	76	-	38,4
OP2(127/76)-4,5-1,1	4,5	1,1	127	76	-	42,0
OP2(127/76)-5,0-1,2	5,0	1,2	127	76	-	44,7

*D3 - Diameter of the Additional Pole Section

Flanged Cable Pole OKF

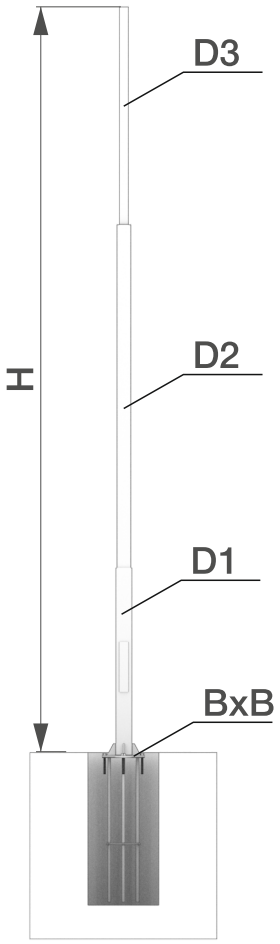

Flanged cable poles are used for illuminating compact areas, residential courtyards, private estates, park zones, bridges, and various recreational spaces.
A luminaire can be mounted directly onto the pole or attached via a bracket.
The pole is secured in the ground or concreted into a drilled pit.

Corrosion Protection Options:
- Anti-corrosion primer and 3-in-1 anti-corrosion enamel
- Cold galvanization and 3-in-1 anti-corrosion enamel
- Hot-dip galvanization

Item	Pole Height (H), m	Flange Size (WxW), mm	D1, mm	D2, mm	D3, mm	Weight, kg	Embedded Anchor Type
Pole OK1F							
OK1F(127/76)-5,0	5,0	290x290	127	108	76	59,6	FM1
OK1F(127/76)-5,5	5,5	290x290	127	108	76	63,5	FM1
OK1F(127/76)-6,0	6,0	290x290	127	108	76	67,4	FM1
OK1F(127/76)-6,5	6,5	290x290	127	108	76	70,3	FM1
Pole OK2F							
OK2F(127/108)-5,0	5,0	290x290	127	108	-	60,1	FM1
OK2F(127/108)-5,5	5,5	290x290	127	108	-	64,7	FM1
OK2F(127/108)-6,0	6,0	290x290	127	108	-	68,6	FM1
OK2F(127/108)-6,5	6,5	290x290	127	108	-	72,5	FM1
Pole OK3F							
OK3F(159/89)-7,0	7,0	350x350	159	127	89	89,1	FM2
OK3F(159/89)-8,0	8,0	350x350	159	127	89	101,3	FM2
OK3F(159/89)-9,0	9,0	350x350	159	127	89	110,4	FM2
Pole OK4F							
OK4F(159/108)-7,0	7,0	350x350	159	127	108	93,3	FM2
OK4F(159/108)-8,0	8,0	350x350	159	127	108	105,5	FM2
OK4F(159/108)-9,0	9,0	350x350	159	127	108	114,7	FM2

Cable Pole OK

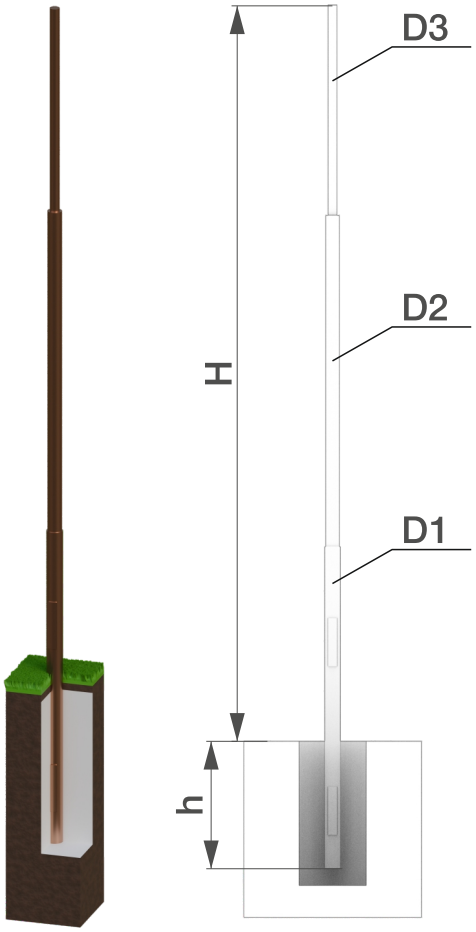

Cable poles are designed for urban street lighting of squares, courtyards, parks, gardens, parking areas, and streets.
These poles are intended for underground cable power supply.
Luminaires are mounted using top brackets.
The pole is installed on a concreted anchor assembly of type FM1 or Fm2.

Corrosion Protection Options:
- Anti-corrosion primer and 3-in-1 anti-corrosion enamel
- Cold galvanization and 3-in-1 anti-corrosion enamel
- Hot-dip galvanization

Item	Pole Height (H), m	Flange Size (WxW), mm	D1, mm	D2, mm	D3, mm	Weight, kg
Pole OK1						
OK1(127/76)-5,0	5,0	1,5	127	108	76	61,7
OK1(127/76)-5,5	5,5	1,5	127	108	76	65,6
OK1(127/76)-6,0	6,0	1,5	127	108	76	68,5
OK1(127/76)-6,5	6,5	1,5	127	108	76	71,4
Pole OK2						
OK2(127/108)-5,0	5,0	1,5	127	108	-	62,9
OK2(127/108)-5,5	5,5	1,5	127	108	-	66,8
OK2(127/108)-6,0	6,0	1,5	127	108	-	70,7
OK2(127/108)-6,5	6,5	1,5	127	108	-	75,2
Pole OK3						
OK3(159/89)-7,0	7,0	1,5	159	127	89	98,6
OK3(159/89)-8,0	8,0	2,0	159	127	89	110,8
OK3(159/89)-9,0	9,0	2,0	159	127	89	119,9
Pole OK4						
OK4(159/108)-7,0	7,0	1,5	159	127	108	102,9
OK4(159/108)-8,0	8,0	2,0	159	127	108	115,0
OK4(159/108)-9,0	9,0	2,0	159	127	108	124,2

Poles for Securing SIP

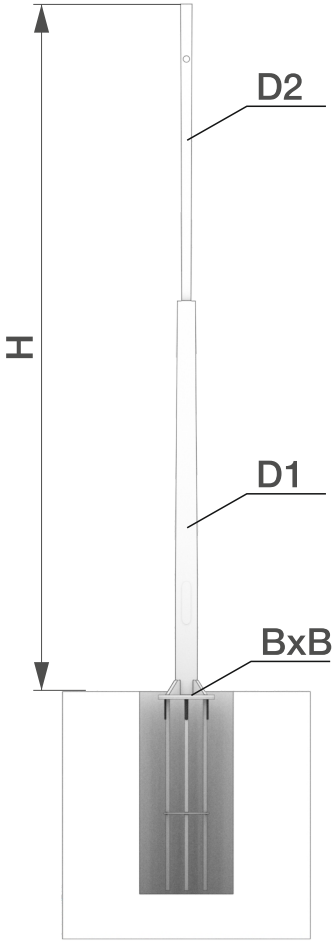

SIP support poles are used for suspending overhead lighting lines.
Poles must be selected based on mechanical strength calculations and resistance to SIP wire tension forces.
Recommendations for pole stand applications are provided in the table.
Luminaires are mounted using top brackets.
The pole is installed on a concreted anchor assembly of type FM

Corrosion Protection Options:
- Anti-corrosion primer and 3-in-1 anti-corrosion enamel
- Cold galvanization and 3-in-1 anti-corrosion enamel
- Hot-dip galvanization

Item	Pole Type	Maximum Bending Moment, t·m	Height (H), m	Flange Size (WxW), mm	D1, mm	D2, mm	Weight, kg	Embedded Anchor Type
СМц63-0,8	Intermediate	0,8	6,3	350x350	127	89	74,3	FM-15
СМц73-1,3	Intermediate	1,3	7,3	350x350	127	108	95,8	FM-15
СМц63-1,9	Anchor and Terminal	1,9	6,3	400x400	159	127	122,7	FM-17,5
СМц63-2,3	Corner Anchor	2,3	6,3	400x400	168	133	139,0	FM-20

Anchor Assemblies for Pole Installation

FM01

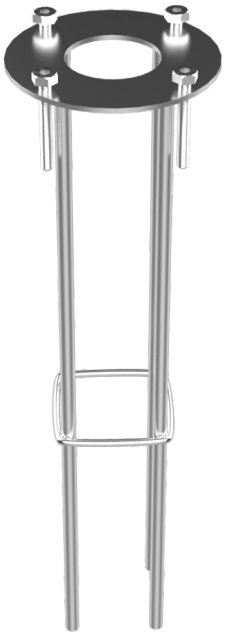

FM02

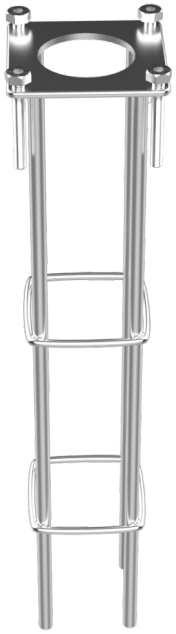

FM, FM1, FM2

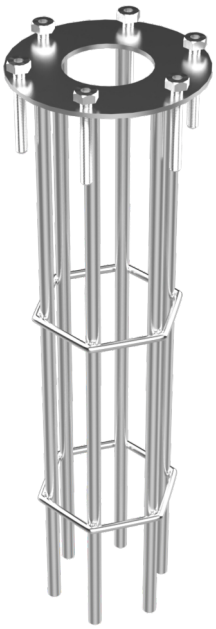

FM6

- FM01, FM02 – Anchor assemblies for park pole installation.
- FM1, FM2 – Anchor assemblies for cable poles and LOFT poles.
- FM – Anchor assembly for autonomous poles and poles supporting overhead lighting lines using self-supporting insulated conductors (SIP).
- FM6 – Anchor assembly for autonomous pole installation (for poles with a height of 7.0 m).

Item	Embedded Anchor Height (H), m	Flange Size (Dx), mm	D, mm (Bolt Hole Diameter, mm)	B Hole Spacing, mm	Weight, kg
FM01-6	0,6	Ø220	180		6,6
FM01-8	0,8	Ø240	200		7,8
FM01-10	1,0	Ø260	220		9,0
FM02-8	0,8	Ø260	220		10,8
FM02-10	1,0	Ø260	220		12,2
FM02-11	1,1	Ø260	220		12,8
FM1-8	0,8	250x250		170	8,4
FM1-10	1,0	250x250		170	11,0
FM1-12,5	1,25	290x290		210	14,7
FM1-15	1,5	290x290		210	16,3
FM2-12,5	1,25	350x350		270	16,4
FM2-15	1,5	350x350		270	23,2
FM-15	1,5	350x350		270	23,9
FM-17,5	1,75	400x400		310	26,4
FM-20	2,0	400x400		310	28,9
FM(6)-15	1,5	Ø350	280		32,6
FM(6)-17,5	1,75	Ø350	280		36,3

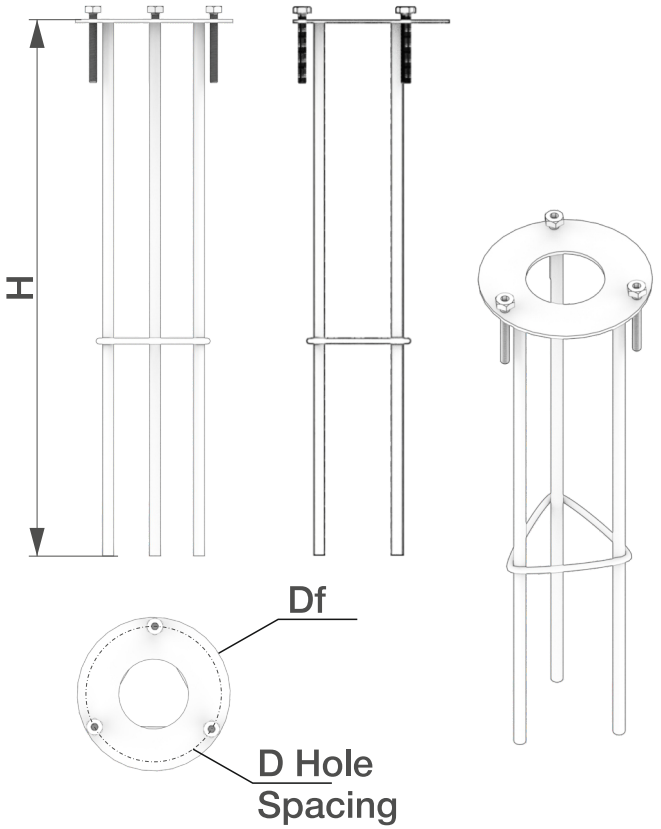

FM01

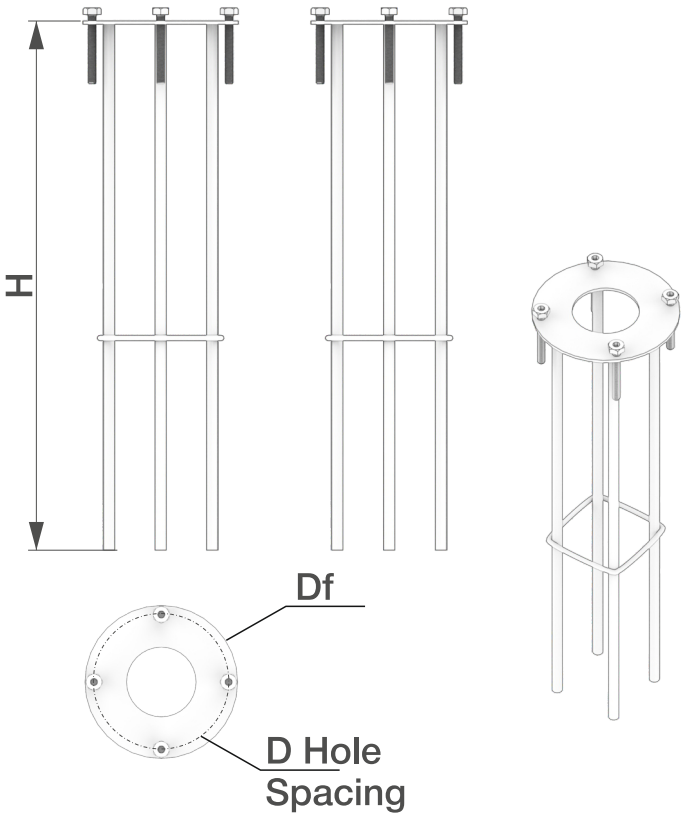

FM02

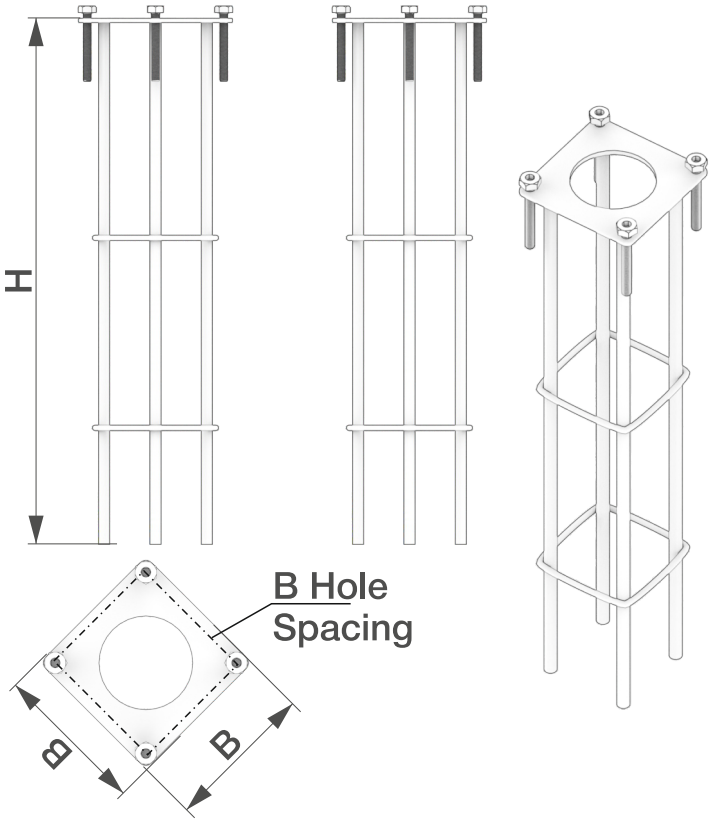

FM, FM1, FM2

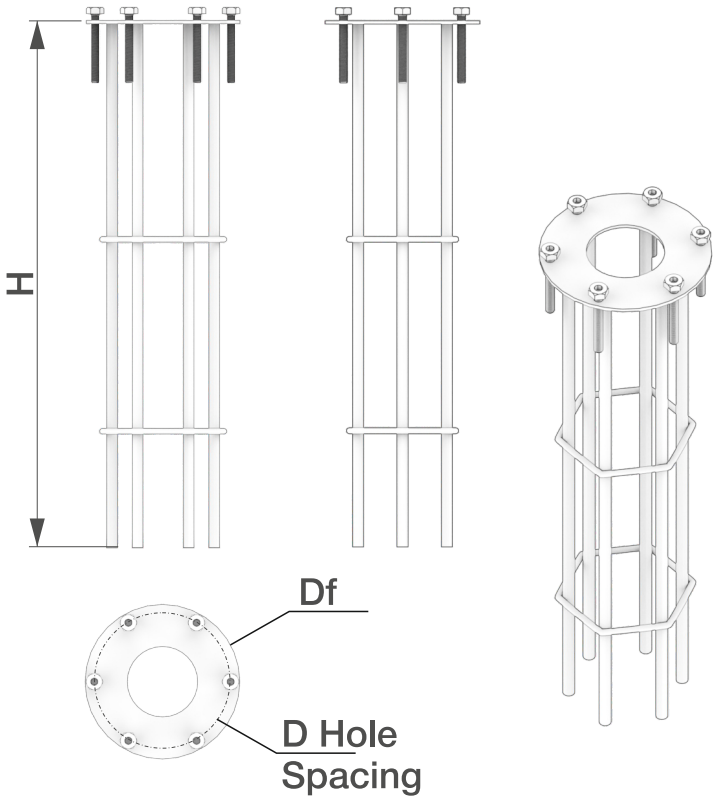

FM6

Kc(c) Bracket

The KC(C) bracket is used for mounting cantilever luminaires on reinforced concrete and metal poles using banding tape.
Pipe diameter for luminaire installation: 48 mm
The table provides available options with a 15° arm inclination angle to the horizontal
Custom brackets with a specific inclination angle can be manufactured upon request
The bracket can be ordered without a hook for SIP attachment

Corrosion Protection Options:
- Anti-corrosion primer and 3-in-1 anti-corrosion enamel
- Cold galvanization and 3-in-1 anti-corrosion enamel
- Hot-dip galvanization

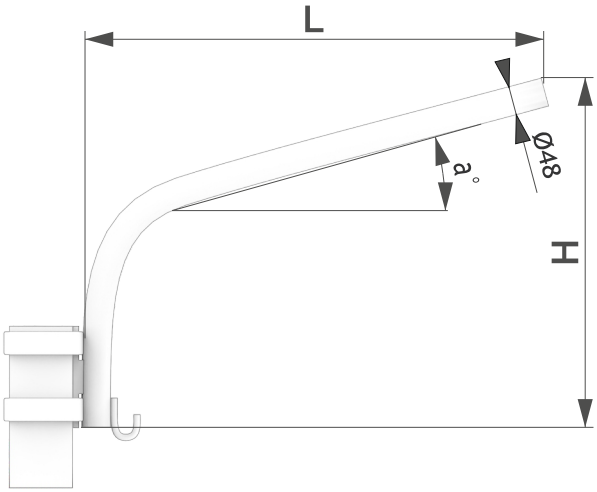

Item	Height (H), m	Length (L), m	Angle (α)	Weight, kg
KC(c) -1-0,5-0,5-15°	0,5	0,5	15°	3,6
KC(c) -1-0,7-0,8-15°	0,7	0,8	15°	5,1
KC(c) -1-0,75-1,0-15°	0,75	1,0	15°	5,7
KC(c) -1-1,0-1,0-15°	1,0	1,0	15°	6,7
KC(c) -1-1,0-1,2-15°	1,0	1,2	15°	7,2
KC(c) -1-1,0-1,5-15°	1,0	1,5	15°	7,9
KC(c) -1-1,2-1,5-15°	1,2	1,5	15°	8,5
KC(c) -1-1,5-1,5-15°	1,5	1,5	15°	9,7
KC(c) -1-1,5-2,0-15°	1,5	2,0	15°	11,0

KC(c)-p Bracket

The KC(c)-P bracket is designed for mounting one or two cantilever luminaires on reinforced concrete and metal poles using banding tape.
Key Features:
The KC(c)-P bracket is highly versatile:
The KC(c)-PO base allows the installation of a KC(c)-P-H-L-α° bracket and a KO2 pole-top bracket with varied outreach, height, and inclination angle.
The KC(c)-P bracket design allows for luminaire orientation adjustment within a 0 to ±90° range.

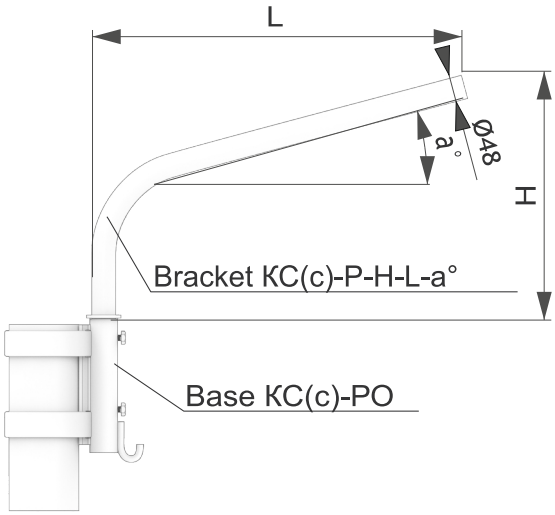

Corrosion Protection Options:
- Anti-corrosion primer and 3-in-1 anti-corrosion enamel
- Cold galvanization and 3-in-1 anti-corrosion enamel
- Hot-dip galvanization

Bracket KC(c)-P-1-H-L-15°

Item	Height (H), m	Overhang (L), m	Angle (α)	Weight, kg
KC(c)-P-1-0,5-0,5-15°	0,5	0,5	15°	8,3
KC(c)-P-1-0,5-1,0-15°	0,5	1,0	15°	9,6
KC(c)-P-1-1,0-1,0-15°	1,0	1,0	15°	11,3
KC(c)-P-1-1,0-1,5-15°	1,0	1,5	15°	12,6
KC(c)-P-1-1,5-1,5-15°	1,5	1,5	15°	13,9

Bracket KC(c)-P-2-H-L-15°

Item	Height (H), m	Overhang (L), m	Angle (α)	Weight, kg
KC(c)-P-2-0,5-0,5-15°	0,5	0,5	15°	10,3
KC(c)-P-2-0,5-1,0-15°	0,5	1,0	15°	13,6
KC(c)-P-2-1,0-1,0-15°	1,0	1,0	15°	15,3
KC(c)-P-2-1,0-1,5-15°	1,0	1,5	15°	18,3
KC(c)-P-2-1,5-1,5-15°	1,5	1,5	15°	19,6

KC(X) Bracket

The KC(X) radius-type top bracket is used for mounting cantilever luminaires on reinforced concrete poles, secured using clamps.
Pipe diameter for luminaire installation: 48 mm.
Available in 15° arm inclination angle to the horizontal (as listed in the table).
Custom brackets with a specific inclination angle can be manufactured upon request.

Corrosion Protection Options:
- Anti-corrosion primer and 3-in-1 anti-corrosion enamel
- Cold galvanization and 3-in-1 anti-corrosion enamel
- Hot-dip galvanization

Bracket KC(x)-1-H-L-15°

Item	Height (H), m	Overhang (L), m	Angle (α)	Weight, kg
KC(x)-1-0,5-0,5-15°	0,5	0,5	15°	4,5
KC(x)-1-0,7-0,8-15°	0,7	0,8	15°	6,0
KC(x)-1-0,75-1,0-15°	0,75	1,0	15°	8,4
KC(x)-1-1,0-1,0-15°	1,0	1,0	15°	9,1
KC(x)-1-1,0-1,2-15°	1,0	1,2	15°	9,6
KC(x)-1-1,0-1,5-15°	1,0	1,5	15°	10,2
KC(x)-1-1,2-1,5-15°	1,2	1,5	15°	10,9
KC(x)-1-1,5-1,5-15°	1,5	1,5	15°	11,9
KC(x)-1-1,5-2,0-15°	1,5	2,0	15°	13,2

Bracket KC(x)-2(β)-H-L-15°

Item	Height (H), m	Overhang (L), m	Angle (α)	Weight, kg
KC(x)-2(β)-0,5-0,5-15°	0,5	0,5	15°	7,3
KC(x)-2(β)-0,7-0,8-15°	0,7	0,8	15°	11,8
KC(x)-2(β)-0,75-1,0-15°	0,75	1,0	15°	13,5
KC(x)-2(β)-1,0-1,0-15°	1,0	1,0	15°	14,8
KC(x)-2(β)-1,0-1,2-15°	1,0	1,2	15°	15,8
KC(x)-2(β)-1,0-1,5-15°	1,0	1,5	15°	17,1
KC(x)-2(β)-1,2-1,5-15°	1,2	1,5	15°	18,5
KC(x)-2(β)-1,5-1,5-15°	1,5	1,5	15°	20,5
KC(x)-2(β)-1,5-2,0-15°	1,5	2,0	15°	23,1

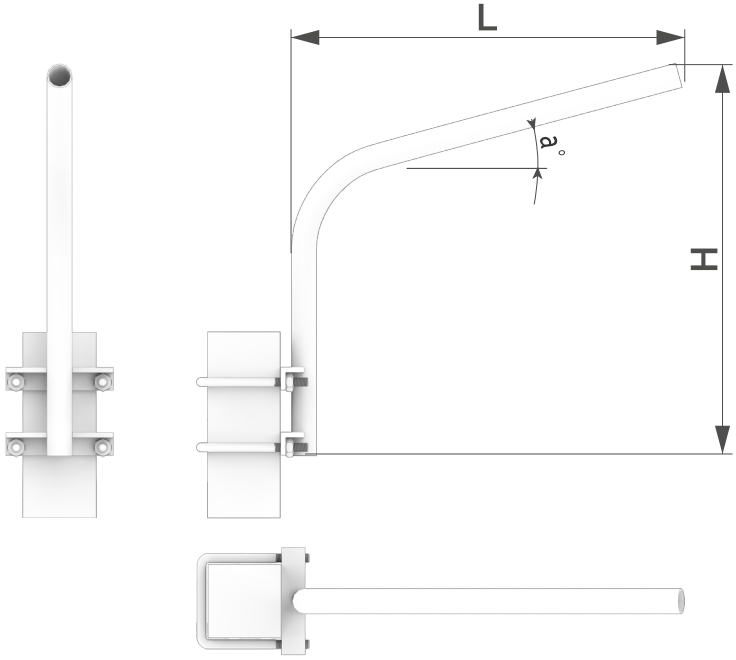

KC(x)1

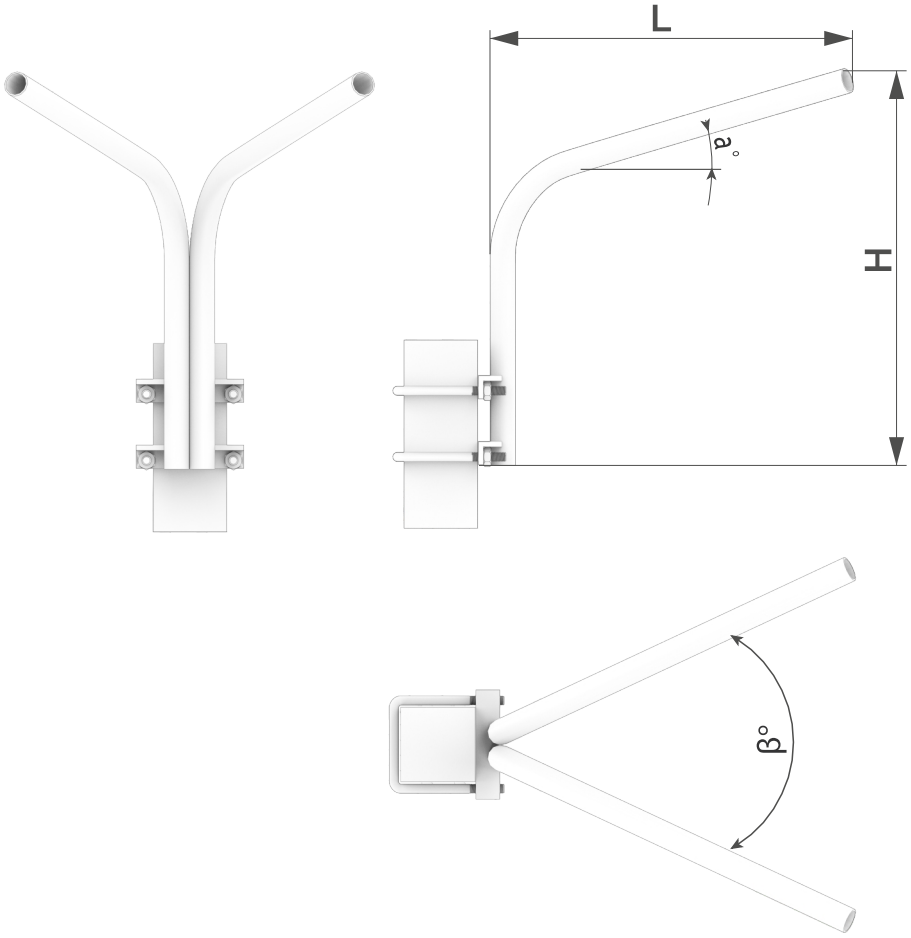

KC(x)2

KBS-U Bracket and KBS-UR Bracket

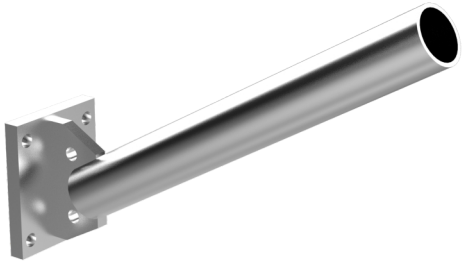

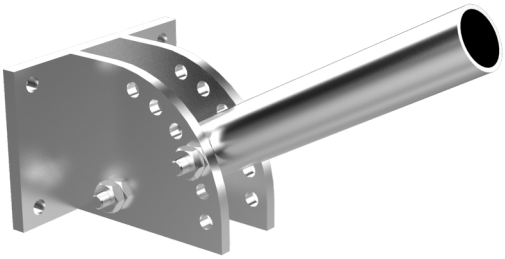

KBS-U Bracket

KBS-UR

The KBS-U bracket is designed for mounting a cantilever luminaire.

Key Features:

Universal mounting system:

Can be wall-mounted using anchors

Can be secured to reinforced concrete and metal poles using stainless steel banding tape

Available in 15°, 30°, and 45° arm inclination angles to the horizontal (as listed in the table)

Custom brackets with a specific inclination angle can be manufactured upon request

Can also be produced with a hook for SIP attachment.

The KBS-UR bracket is designed for mounting a cantilever luminaire and features universal mounting with adjustable inclination.

Key Features:

Universal mounting system:

Can be wall-mounted using anchors

Can be secured to reinforced concrete vibrated poles using stainless steel banding tape.

Adjustable arm inclination angle from 0° to 75°, with 15° increments

Corrosion Protection Options:

- Anti-corrosion primer and 3-in-1 anti-corrosion enamel
- Cold galvanization and 3-in-1 anti-corrosion enamel
- Hot-dip galvanization

Item	Angle (α)	Length (L), m	Weight, kg
KBS-U(15°)-0,35	15°	0,35	1,4
KBS-U(15°)-0,4	15°	0,4	1,6
KBS-U(15°)-0,5	15°	0,5	1,9
KBS-U(15°)-0,6	15°	0,6	2,2
KBS-U(15°)-0,75	15°	0,75	2,7
KBS-U(30°)-0,35	30°	0,35	1,4
KBS-U(30°)-0,4	30°	0,4	1,6
KBS-U(30°)-0,5	30°	0,5	1,9
KBS-U(30°)-0,6	30°	0,6	2,2
KBS-U(30°)-0,75	30°	0,75	2,7
KBS-U(45°)-0,35	45°	0,35	1,4
KBS-U(45°)-0,4	45°	0,4	1,6
KBS-U(45°)-0,5	45°	0,5	1,9
KBS-U(45°)-0,6	45°	0,6	2,2
KBS-U(45°)-0,75	45°	0,75	2,7
KBS-UR-0,3	Змінний	0,3	2,5
KBS-UR-0,35	Змінний	0,35	2,7
KBS-UR-0,4	Змінний	0,4	2,9
KBS-UR-0,5	Змінний	0,5	3,2
KBS-UR-0,6	Змінний	0,6	3,5
KBS-UR-0,75	Змінний	0,75	4,0

KBS-U Bracket and KBS-UR Bracket

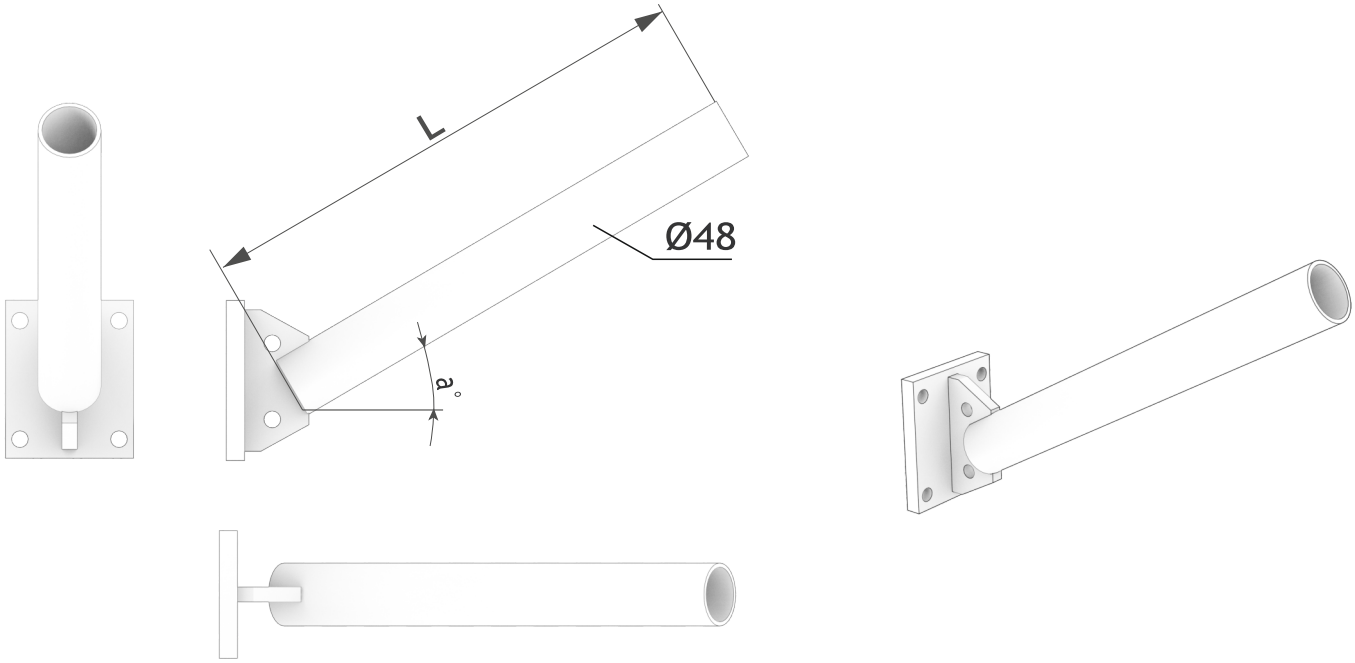

KBS-U Bracket

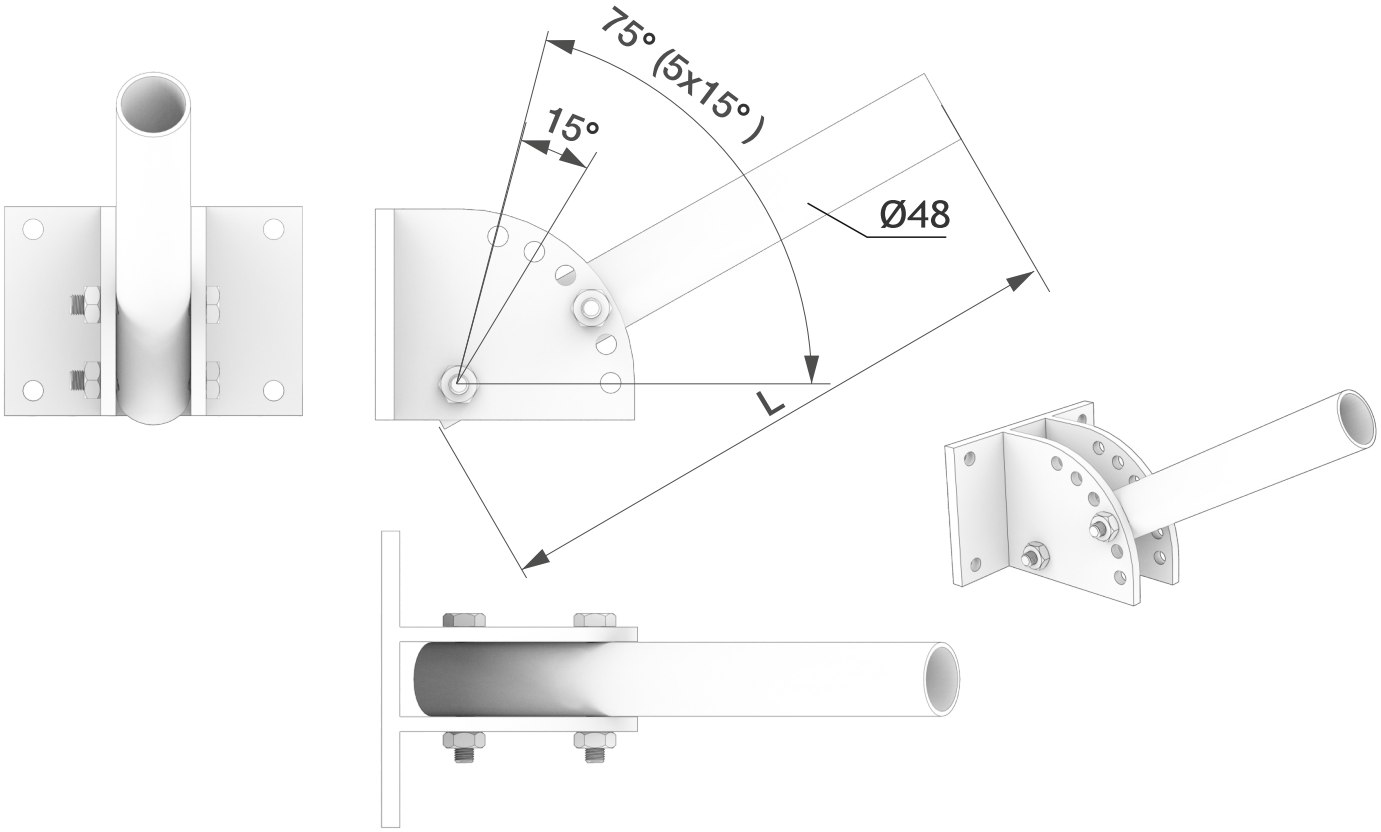

KBS-UR Bracket

KO1 Top Bracket

K01 - 1

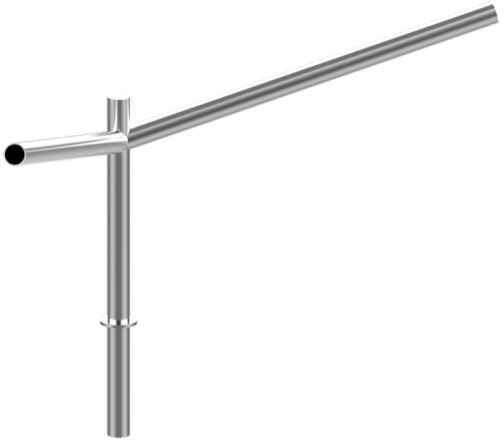

K01 - 2

K01 - 3

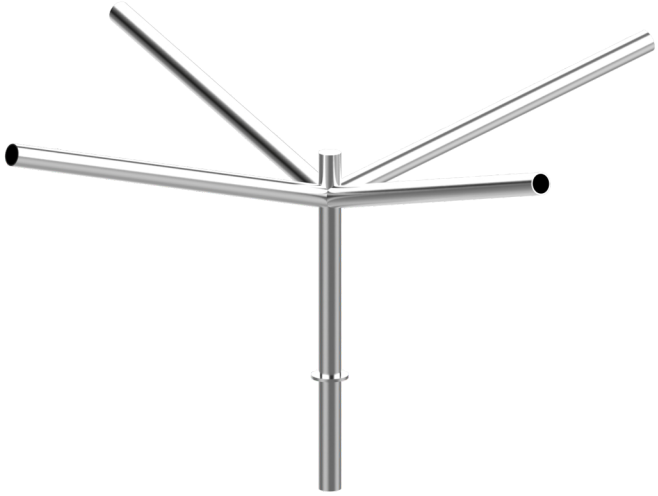

K01 - 4

The KO1 top bracket is designed for mounting from 1 to 4 cantilever luminaires.
It is compatible with cable poles and SIP support poles.
When ordering, it is necessary to specify the type of pole for installation to ensure the flange is manufactured in the required size.

Corrosion Protection Options:
- Anti-corrosion primer and 3-in-1 anti-corrosion enamel
- Cold galvanization and 3-in-1 anti-corrosion enamel
- Hot-dip galvanization

WHITE BOX WORKSHOP

Bracket KO1-1-H-L-15°

Item	Height (H), m	Overhang (L), m	Angle (α)	Weight, kg
KO1-1-0,5-0,8-15°	0,5	0,8	15°	6,1
KO1-1-0,5-1,0-15°	0,5	1,0	15°	6,8
KO1-1-1,0-1,0-15°	1,0	1,0	15°	8,8
KO1-1-1,0-1,2-15°	1,0	1,2	15°	9,4
KO1-1-1,0-1,5-15°	1,0	1,5	15°	10,4
KO1-1-1,5-1,5-15°	1,5	1,5	15°	12,0
KO1-1-1,5-2,0-15°	1,5	2,0	15°	13,7

Bracket KO1-2(β)-H-L-15°

Item	Height (H), m	Overhang (L), m	Angle (α)	Weight, kg
KO1-2(β)-0,5-0,8-15°	0,5	0,8	15°	9,1
KO1-2(β)-0,5-1,0-15°	0,5	1,0	15°	10,4
KO1-2(β)-1,0-1,0-15°	1,0	1,0	15°	12,4
KO1-2(β)-1,0-1,2-15°	1,0	1,2	15°	13,8
KO1-2(β)-1,0-1,5-15°	1,0	1,5	15°	15,8
KO1-2(β)-1,5-1,5-15°	1,5	1,5	15°	17,4
KO1-2(β)-1,5-2,0-15°	1,5	2,0	15°	20,7

The distance β between the consoles can be -60°; 90°; 120°; 180°.

Bracket KO1-3(β)-H-L-15°

Item	Height (H), m	Overhang (L), m	Angle (α)	Weight, kg
KO1-3(β)-0,5-0,8-15°	0,5	0,8	15°	12,1
KO1-3(β)-0,5-1,0-15°	0,5	1,0	15°	14,1
KO1-3(β)-1,0-1,0-15°	1,0	1,0	15°	16,1
KO1-3(β)-1,0-1,2-15°	1,0	1,2	15°	18,1
KO1-3(β)-1,0-1,5-15°	1,0	1,5	15°	21,1
KO1-3(β)-1,5-1,5-15°	1,5	1,5	15°	22,7
KO1-3(β)-1,5-2,0-15°	1,5	2,0	15°	27,7

The distance β between the consoles can be -90°; 120°.

Bracket KO1-4(90°)-H-L-15°

Item	Height (H), m	Overhang (L), m	Angle (α)	Weight, kg
KO1-4(90)-0,5-0,8-15°	0,5	0,8	15°	15,1
KO1-4(90)-0,5-1,0-15°	0,5	1,0	15°	17,8
KO1-4(90)-1,0-1,0-15°	1,0	1,0	15°	19,8
KO1-4(90)-1,0-1,2-15°	1,0	1,2	15°	22,4
KO1-4(90)-1,0-1,5-15°	1,0	1,5	15°	26,4
KO1-4(90)-1,5-1,5-15°	1,5	1,5	15°	28,0
KO1-4(90)-1,5-2,0-15°	1,5	2,0	15°	34,7

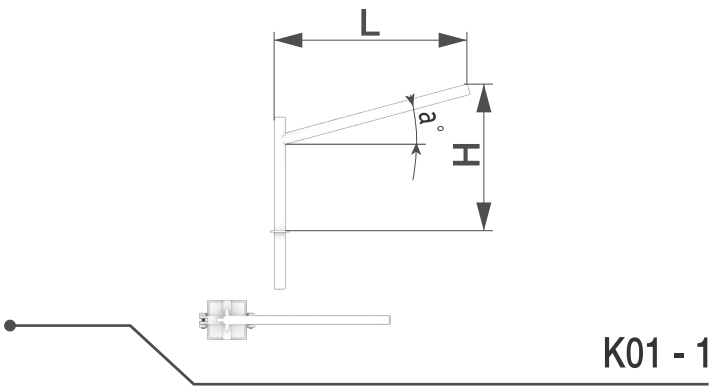

K01 - 1

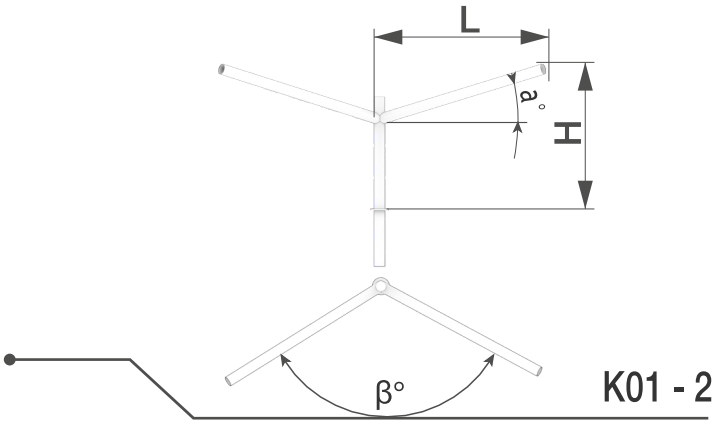

K01 - 2

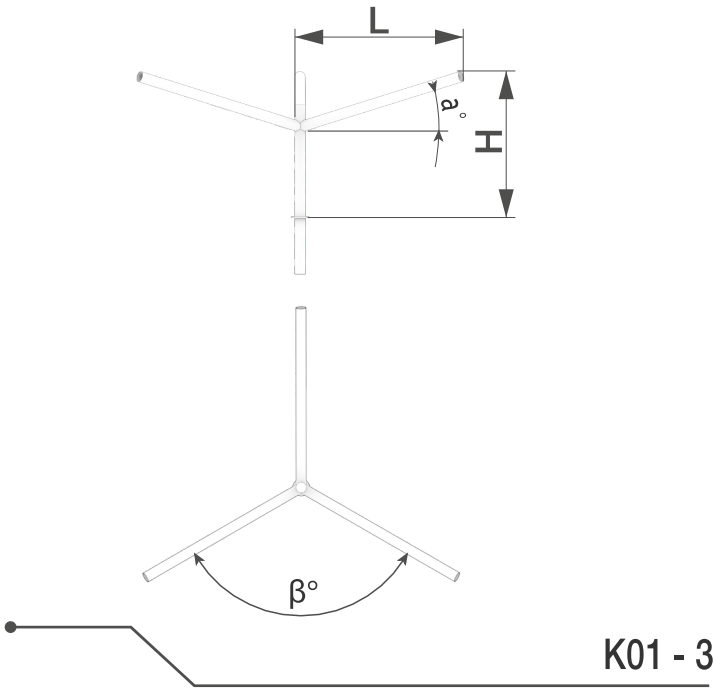

K01 - 3

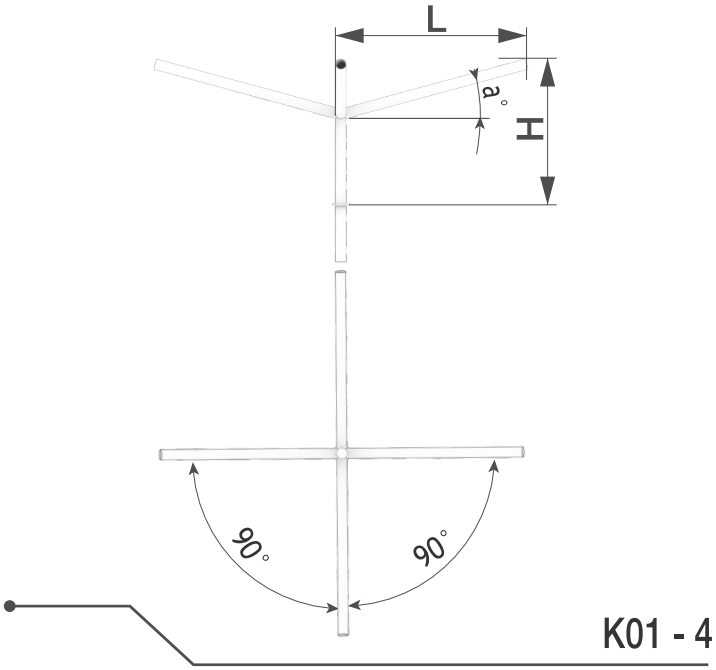

K01 - 4